# Modeling and Structure based Immunoinformatic Analysis of the Fas Receptor and the Fas-Associated Protein with Death Domain

**Urmi Roy***

**Center for Advanced Materials Processing, Clarkson University, Potsdam, NY 13699**

*e-mail: urmi@clarkson.edu

## Introduction

The **Fas receptor** is a representative death receptor, and the **Fas-Associated Protein with Death Domain** (FADD) is a crucial adapter protein needed to support the Fas receptor's activity. The **Fas-FADD interactions** constitute an important **signaling pathway** that ultimately induces **apoptosis** or **programmed *cell death*** in biological systems. Using a computational approach, the present poster explores certain essential structural aspects of the **Fas-FADD death domains** and their interfacial interactions.

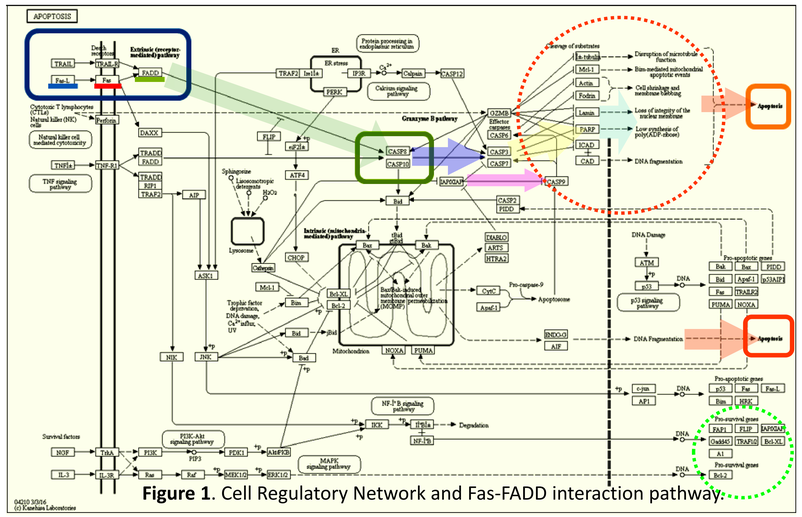

**Figure 1**. Cell Regulatory Network and Fas-FADD interaction pathway.

This Figure is generated using *KEGG PATHWAY Database*.

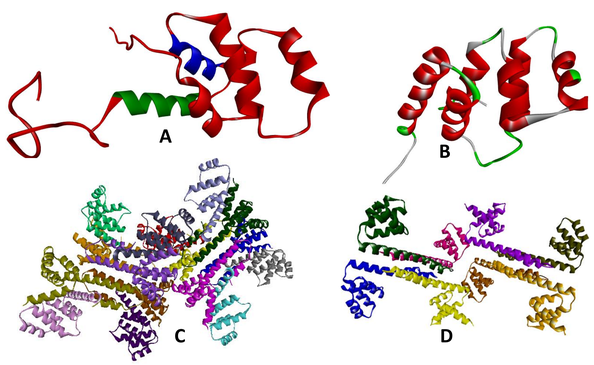

**Figure 2**. Secondary Structure of A. **Fas DD**, 1DDF where α5 and α6 are colored in green and blue respectively. B. **FADD DD**, 1E3Y. C. **Fas-FADD complex**, 3EZQ. D. Fas chains in 3EZQ.PDB

## Methods

- **1DDF** and **1E3Y** are used as structural representatives of **Fas and FADD DD**.
- The **Fas–FADD pair complex** of **3EZQ** (chains A and B) is used for the MD simulation.
- **Nanoscale Molecular Dynamics** (NAMD) and Visual Molecular Dynamics (VMD) programs have been used.

## Results and Discussion

### Structure of the Fas DD and FADD DD

- **1DDF** is the solution based NMR structure of closed **Fas DD**. It is predicted that α5 and α6 are the possible FADD binding regions in Fas (Figure 2A).
- The **DD of FADD** is described in **1E3Y**. 1E3Y has six α-helices connected by short loops (Figure 2B).

### Insight into FAS DD–FADD DD Interactions

- For the **FAS–FADD death domain**, we use pdb file **3EZQ**. Our present structural studies are mostly centered on Chains **A (residues 223–337)** and **B (residues 93–191)**, which represent the **FAS DD** and **FADD DD** respectively.

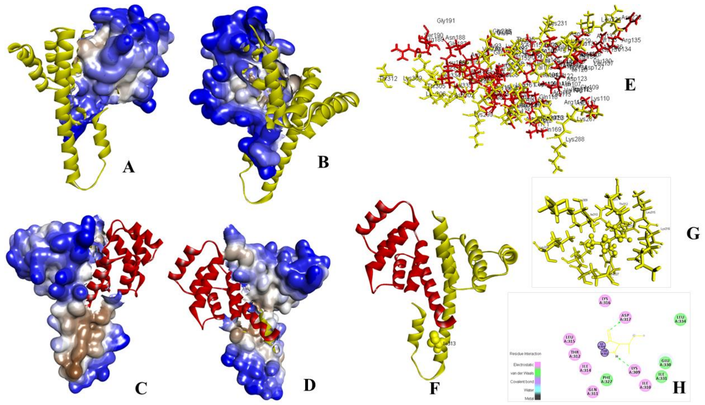

**Figure 3.** Fas (yellow) and FADD (red) chain in 3EZQ.PDB. A, B. Hydrophobic surface of FADD and C, D. Fas in 3EZQ. A, C Front view, B, D view from the back. E. Residues at the receptor–adapter interface. F Ile313 (CPK mode) is displayed. G. Surrounding residues of Ile313. H. Interaction of Ile313 with its immediate neighbors.

### Structural Analyses of the Individual Protein Chains and Protein Complex using Molecular Dynamics Simulation

- From the MD simulation we assume that the **Fas–FADD pair complex** is more **stable** (all atom RMSD max value 2.37 Å) than the individual species of Fas DD or FADD DD (Figure 4A).
- The number of hydrogen bonds with the water molecules experiences a minor net increase indicating more **compact nature of the complex** with respect to those of the *individual protein chains*(Figure 4C).
- The SASA values of individual **Fas chain** and **Fas residues** in **3EZQ pair complex** are ***comparable***. Nonetheless, the **FADD** *individual species* has ***more exposed residues*** *compared to the corresponding case of the* ***FADD residues*** within the **Fas–FADD pair complex** (Figure 4D-F).
- Similar to Fas DD and FADD DD, the total, potential and van Der Waals energies of **Fas–FADD pair complex** are **temporally *steady*** (Figure 4G-I).

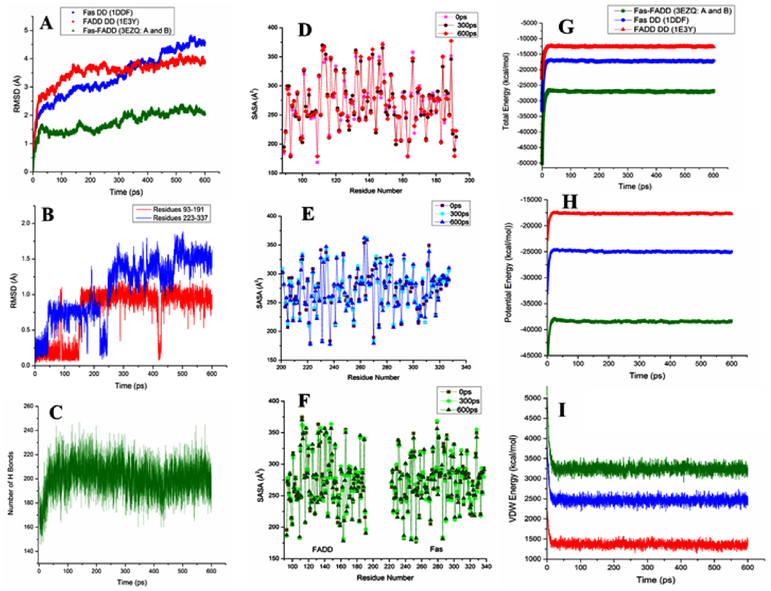

**Figure 4**. A. RMSD (all atom) of **Fas DD**, **FADD DD** and **Fas–FADD pair complex**. B. All atom RMSD of FADD (residues 93–191) and Fas (residues 223–337) within 3EZQ pair complex. C. Number of hydrogen bonds in **Fas-FADD pair complex** with water during MD simulation. D-F. Variations of SASA values at different time points during MD simulation. G-H. Total energy, potential energy and van der Waals energy plotted against time during MD simulation.

## Summary and Outlook

- The **Fas–FADD pair complex** (3EZQ: Chain A and B) is ***more* stable** than the **individual Fas** (1FAD) or **FADD** (1E3Y) protein chains.
- The structure of the **protein complex** is somewhat ***more* compact** than those of the individual proteins (Fig. 5c).
- **FADD *is more stable than* Fas** as an individual protein and also in a protein complex(Fig. 5a, b).
- The total energy of the **Fas–FADD pair complex** has a comparatively lower value indicating the **stable nature of the complex**

## Acknowledgement

- **CAMP**
- **Clarkson University**

### Reference

U. Roy, Structural Characterizations of the Fas Receptor and the Fas-Associated Protein with Death Domain Interactions, *The Protein Journal*, **35**, 51-60 (2016).